MODENTIC

Three Piece Design, High Performance, Full Bore, 2000 PSI

Fig No:EL-155

1/4" ~ 2" (DN 8 ~ DN 50)

Valve Specification :

Design Specification According to ANSI B16.34

Material : Stainless Steel, Carbon Steel or Special Alloy upon request
Blow-out-proof stem design & Anti-static design
Stem packing to comply with **TA-Luft** requirements
Actuator Mounting Shall be in accordance with ISO 5211
In-Line Maintenance
End Connection:Threaded / Scoket Weld / Butt Weld
Working Pressure : 1/2" ~ 1" 2000 Psi / 1-1/4" ~ 2" 1500 Psi
Temperature Range : -4 to 356 ˚F (-20 to 180 ˚C)
Pressure Test According to API 598 :
Shell test by water : 1/2" ~ 1" 3000 Psi / 1-1/4" ~ 2" 2250 Psi
Closure seat by Air : 80 ~ 100 Psi

MATERIALS LIST

NO	PART NAME	MATERIAL	Q'TY
1	BODY	ASTM A351 GR.CF8M	1
2	END CAP	ASTM A351 GR.CF8M	2
3	BALL	ASTM A351 GR.CF8M	1
4	BODY SEAL	PTFE.	2
5	STEM	SS316	1
6	FOLLOWER	SS304	1
7	STEM PACKING	NRG	1 SET
9	SEAT	RTFE.	2
10	THRUST WASHER	NRG	1
17	STEM NUT	SS304	1
18	TAB WASHER	SS304	1
19	BOLT NUT	SS304	4~12
20-1	BOLT	SS304	4~12
20-2	MOUNTING BOLT	SS304	8
21	BELLEVILLE WASHER	SS301	1 SET
29	BOLT WASHER	SS304	4~12
37	MOUNTING BRACKET	SS304	1
38	ADAPTER	SS304	1
40	ELECTRIC AUTUATOR	NYLON	1

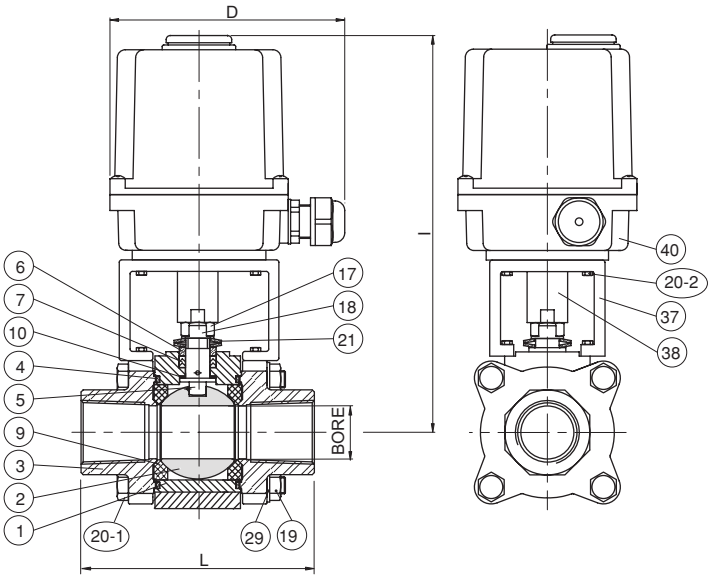

DIMENSIONS

Unit:mm

SIZE	1/4"				3/8"				1/2"				3/4"				1"				1-1/4"				1-1/2"				2"			
ELECTRIC FIG.	UMS			UM-1	UMS			UM-1	UMS			UM-1	UMS			UM-1	UM-1				UM-1				UM-1				UM-2			
VOLTAGE	110 VAC	220 VAC	24 VAC	24 DVC	110 VAC	220 VAC	24 VAC	24 DVC	110 VAC	220 VAC	24 VAC	24 DVC	110 VAC	220 VAC	24 VAC	24 DVC	110 VAC	220 VAC	24 VAC	24 DVC	110 VAC	220 VAC	24 VAC	24 DVC	110 VAC	220 VAC	24 VAC	24 DVC	110 VAC	220 VAC	24 VAC	24 DVC
BORE	11.1				11.1				14.2				20.6				25.4				31.8				38.1				51.1			
D	136.2	136.2	136.2	148.0	136.2	136.2	136.2	148.0	136.2	136.2	136.2	148.0	136.2	136.2	136.2	148.0	148.0	148.0	148.0	148.0	148.0	148.0	148.0	148.0	148.0	148.0	148.0	148.0	148.0	148.0	148.0	148.0
I	146.8	146.8	146.8	193.3	146.5	146.5	146.5	193.8	146.5	146.5	146.5	193.0	150.5	150.5	150.5	197.0	200.0	200.0	200.0	200.0	204.0	204.0	204.0	204.0	211.3	211.3	211.3	211.3	274.3	274.3	274.3	274.3
L	66.0				66.0				71.1				94.0				108.0				115.3				128.0				151.1			