Fig No: HPV40 Reduced Bore

1/4"~ 2" DN8 ~ DN50

APPLICABLE STANDARDS	
Body Wall Thickness	ASME B16.34
Threaded End	BS 21
	BS 21(BSP)
	ISO 228-1G
	DIN 2999
Socket End	ASME B16.34; ASME B16.11
Butt Weld End	ASME B16.25
Face to Face	Mfg. Std
Material	ASME B16.34
Pressure - Temperature Rating	ASME B16.34
Pressure Teating	API 598

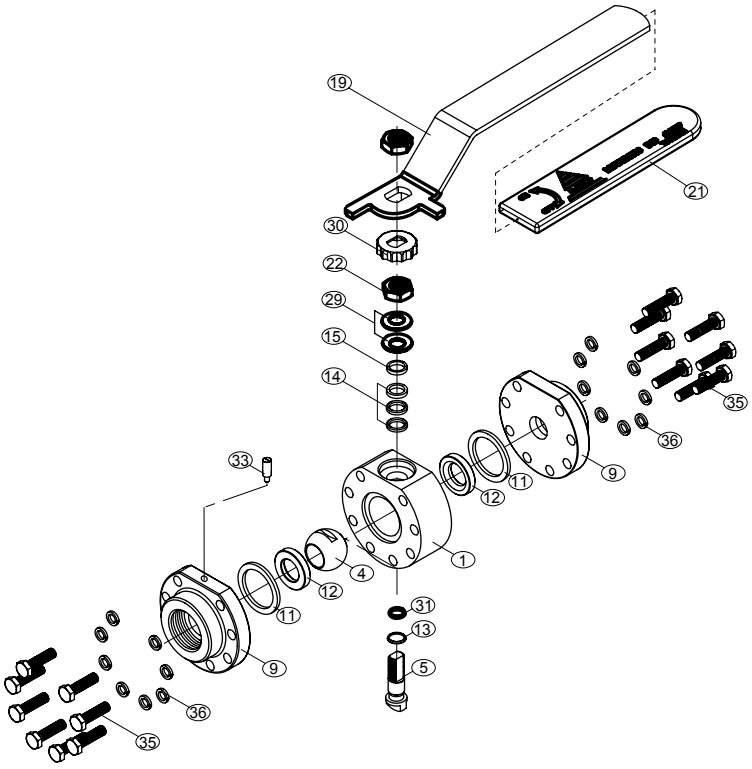

MATERIAL LIST

NO.	PART NAME	MATERIAL
1	BODY	ASTM A182 Gr. F51 ASTM A182 Gr. F60
4	BALL	ASTM A182 Gr. F51 ASTM A182 Gr. F60
11	BODY SEAL	Delrin PEEK
9	END CAP	ASTM A182 Gr. F51 ASTM A182 Gr. F60
5	STEM	ASTM A182 Gr. F51 ASTM A182 Gr. F60
14	STEM PACKING	PTFE-25% Carbon Filled PEEK
19	HANDLE	SS304
12	SEAT	Delrin PEEK
13	THRUST WASHER	Delrin PEEK
15	GLAND BUSH	S304
21	LEVER COVER	PLASTIC
22	NUT	S304
26	PLUNGER SPRING	S316
27	ANTI-STATIC BALL	S316
29	BELLEVILLE WASHER	S304
30	CROWN WASHER	S304
31	STEM O-RING	VITON
33	LEVER STOP	S304
35	BOLT	A193 Gr.B8
36	BOLT WASHER	SS304

Fig No: HPV40 Reduced Bore
1/4"~ 2" DN8 ~ DN50

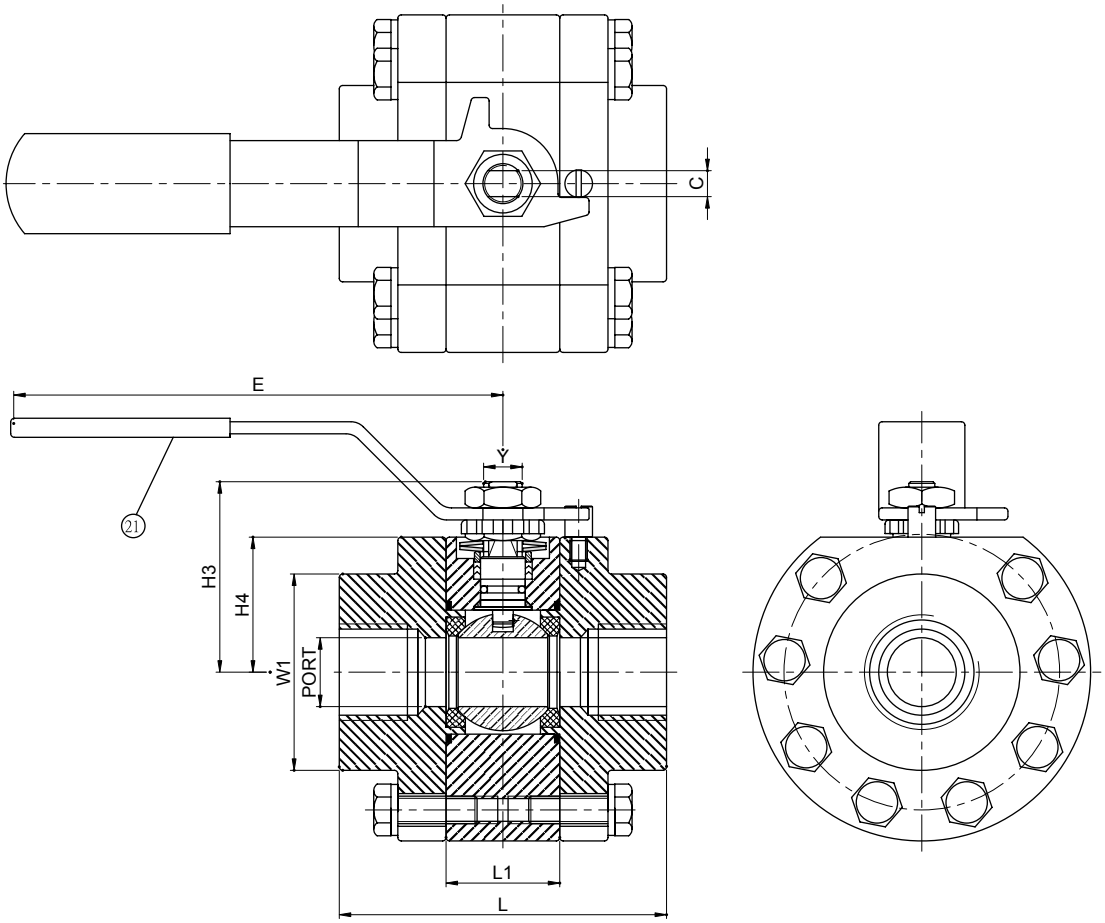

DIMENSIONS

unit:mm

SIZE	PORT	L	L1	E	H3	H4	C	Y	W1
1/4"	9.7	75.0	25.0	142.0	42.0	29.0	5.54	3/8" UNF	76.0
3/8"	11.6	75.0	25.0	142.0	42.0	29.0	5.54	3/8" UNF	76.0
1/2"	12.5	75.0	25.0	142.0	42.0	29.0	5.54	3/8" UNF	76.0
3/4"	15.0	85.0	33.0	142.0	48.3	35.0	5.54	3/8" UNF	84.0
1"	20.0	95.0	33.0	162.0	54.0	39.2	7.54	7/16" UNF	98.0
1-1/4"	25.0	108.0	41.0	162.0	57.6	42.8	7.54	7/16" UNF	107.0
1-1/2"	32.0	128.0	50.0	200.0	73.0	51.5	8.68	9/16" UNF	130.0
2"	38.0	156.0	56.0	200.0	79.0	57.5	8.68	9/16" UNF	146.0