3/4 Way Sanitary Ball Valve,Tube Bore,800/600psi

MODENTIC

Fig No: K-324TC Tube Bore
1/2"~ 4" **DN15 ~ DN100**

Application Include:
* Pharmaceuticals
* Biotechnology
* Food/Beverage
* Specialty chemicals

Standard Compliance: 3-A
* Body rating 1/2"~2" 800psi, 2-1/2"4" 600psi
* Temperature range: -4 to 356˚F(-20 to 180˚C)
* End connections: Tri-clamp end

Options:
* CF3M w/Ferrite content of less than 3%, Sulfur content between 0.005% and 0.017%
* Padlocking device
* Cavity filler seat

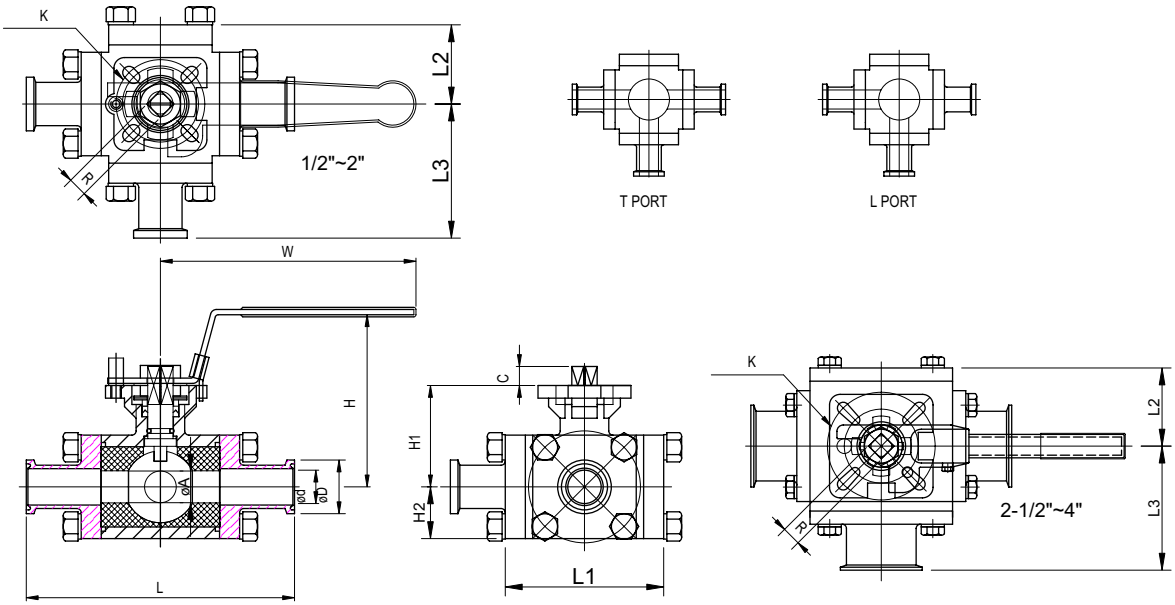

DIMENSION(M.M.)

SIZE	DN	K	øA	W	H	H1	C	L	ød	øD	L1	L2	L3	H2	R	
1/2"	15	F03 ／F04	9.5	121	78	44.5	9	118	9.5	25.4	70	35.0	59.0	23.5	9	M12*1.75
3/4"	20	F03 ／F04	15.0	121	82	48	9	127	15.8	25.4	77	38.5	63.5	26	9	M12*1.75
1"	25	F04／F05	20.0	137	90	59	11	152.4	22.2	50.4	86	43.0	76.2	30.5	11	M14*P2
1-1/2"	40	F05／F07	32.0	182	110	72	14	175	35.0	50.4	111	55.5	87.5	40	14	M18*P2.5
2"	50	F05／F07	40.0	182	114.7	82	14	190	47.6	63.9	124	62.0	95.0	50	14	M18*P2.5
2-1/2"	65	F07／F10	50.0	370	108	100	17	228	60.2	77.5	125	62.5	107.0	61	17	M22*P2.5
3"	80	F10／F12	65.3	400	134	125.5	23	260	73.0	90.9	151	75.5	122.0	74	22	1-1/8"*12UNF
4"	100	F10／F12	80.0	400	156	135.5	23	318	97.4	118.9	190	80.5	144.5	62.5	22	1-1/8"*12UNF

http://www.modentic.com.tw/

Fig No: K-324TC Tube Bore

1/2"~ 4" **DN15 ~ DN100**

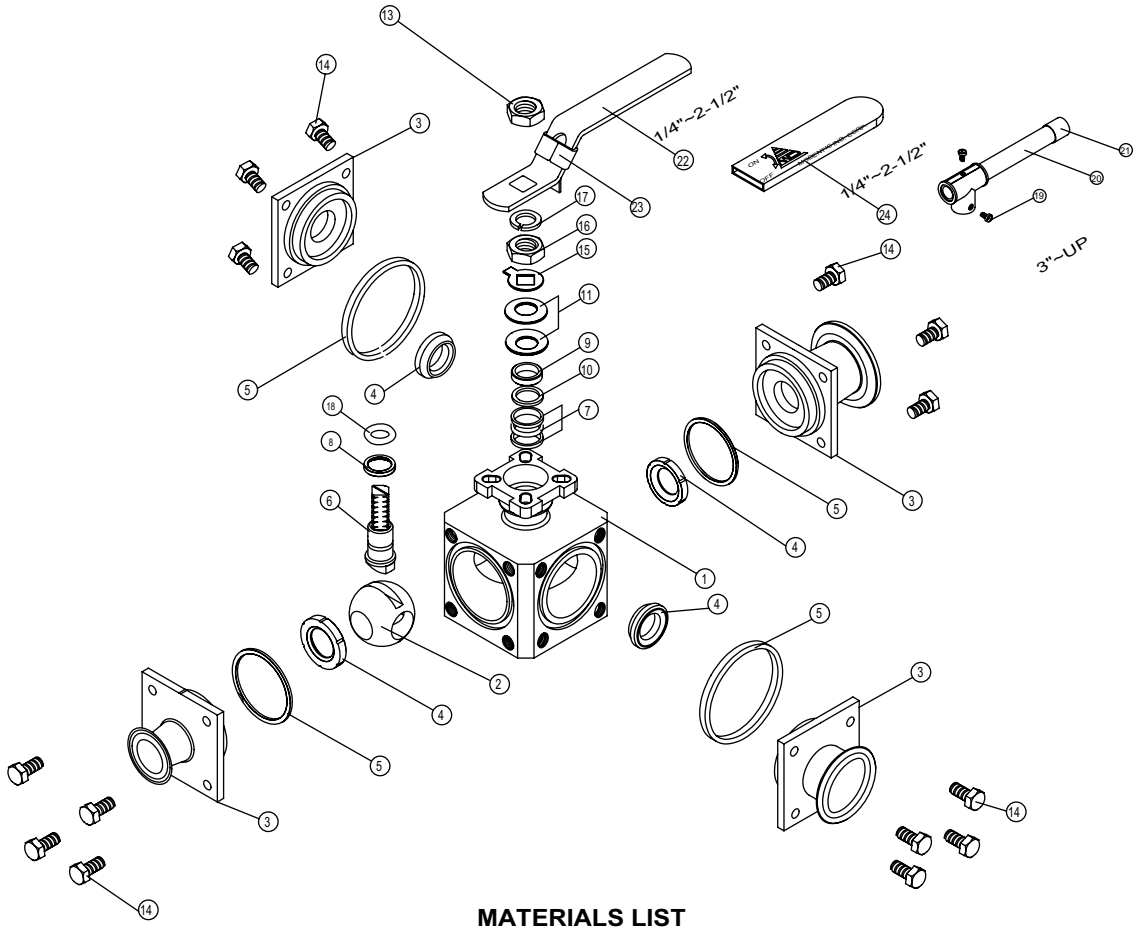

MATERIALS LIST

NO	PART NAME	MATERIAL
1	BODY	CF8M
2	BALL	CF8M
3	END CAP	CF8M
4	SEAT	PTFE / TFM1600
5	BODY SEAL	PTFE / TFM1600
6	STEM	SS316
7	STEM PACKING	PTFE / TFM1600
8	THRUST WASHER	PTFE / TFM1600
9	GLAND BUSH	SS304
10	GLAND WASHER	PTFE / TFM1600
11	BELLEVILLE WASHER	SS301
12	LOCKING PAD	SS304
13	HANDLE NUT	SS304
14	BOLT	SS304
15	TAB WASHER	SS304
16	STEM NUT	SS304
17	STEM WASHER	SS304
18	O-RING	VITON
19	BOLT	SS304
20	PIPE HANDLE	STAINLESS STEEL
21	PIPE HANDLE COVER	PLASTIC
22	HANDLE	SS304
23	LOCKING PAD	SS304
24	HANDLE COVER	PLASTIC