MODENTIC

Two Pieces Flanged Ball Valves, Full Bore, JIS 10K

Fig No: MD-24 JIS 10K

1/2"~ 8" **DN 15~ DN 200**

Features:

Investment Cast Components.
Blow-Out-Proof Stem Design, Antistatic Device.
Two Position Locking Device.
Four Point ISO 5211 Mounting Pad Bolt Circle.
Available Carbon Or Stainless Steel Body Construction.

Specifications:

Temperature range:-4 to 356˚F (-20 to 180˚C).
150 psig saturated steam.
Shell Wall Thickeness:ASME B16.34
Face To Face:JIS B2002
End Flange:JIS B2010

MATERIALS LIST

NO.	PART NAME	MATERIALS	Q'TY
1	BODY	SCS14	1
4	BALL	SCS14	1
5	STEM	SS316	1
9	CAP	SCS14	1
11	BODY SEAL	PTFE.	1
12	SEAT	PTFE.	2
13	THRUST WASHER	PTFE.	1
14	STEM PACKING	PTFE.	1SET
15	GLAND	SCS13	1
19	HANDLE	WCB	1
28	STOP PLATE	SS304	1
35	BODY BOLT	SS304	4~8
41	SNAP RING	SS304	1
42	GLAND BOLT	SS304	2
56	BEARING	PTFE.(4"~8")	1

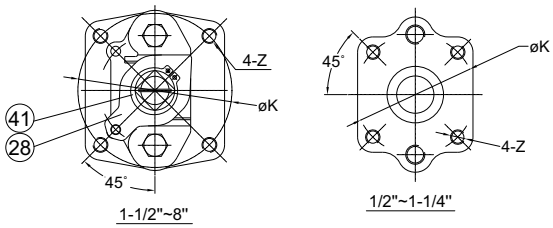

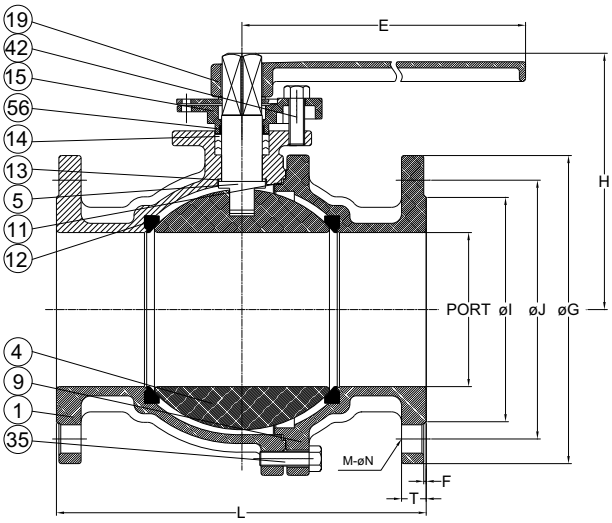

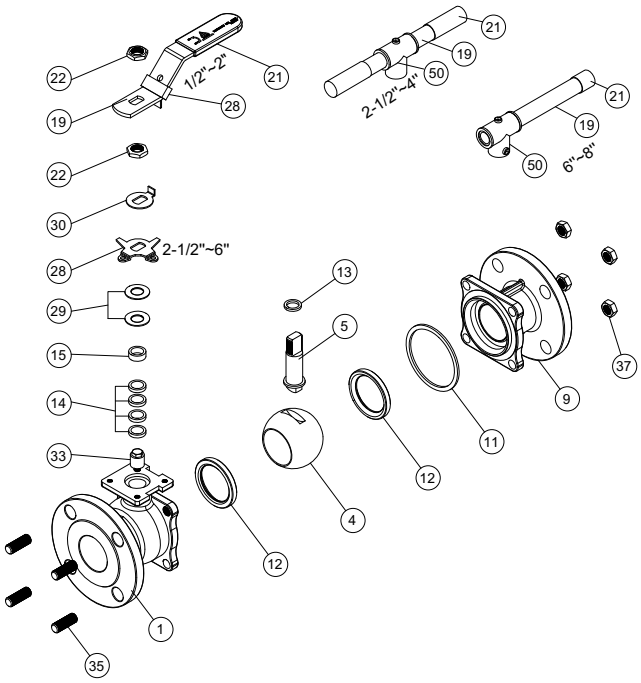

DIMENSIONS

unit:mm

DN	NPS	PORT	L	E	H	øG	øJ	øI	T	F	M-øN	øK	Z
DN15	1/2"	15.0	110.0	160.0	73.3	95.0	70.0	51.0	12.0	1.0	4-ø15.0	42.0	M5
DN20	3/4"	20.0	120.0	160.0	76.0	100.0	75.0	56.0	14.0	1.0	4-ø15.0	42.0	M5
DN25	1"	25.0	130.0	160.0	80.6	125.0	90.0	67.0	14.0	1.0	4-ø19.0	42.0	M5
DN32	1-1/4"	32.0	140.0	160.0	84.8	135.0	100.0	76.0	16.0	2.0	4-ø19.0	50.0	M6
DN40	1-1/2"	40.0	165.0	206.0	105.5	140.0	105.0	81.0	16.0	2.0	4-ø19.0	70.0	M8
DN50	2"	50.0	180.0	206.0	111.0	155.0	120.0	96.0	16.0	2.0	4-ø18.0	70.0	M8
DN65	2-1/2"	65.0	190.0	350.0	145.5	175.0	140.0	116.0	18.0	2.0	4-ø19.0	70.0	M8
DN80	3"	80.0	200.0	350.0	156.0	185.0	150.0	126.0	18.0	2.0	8-ø19.0	102.0	M10
DN100	4"	100.0	240.0	700.0	166.4	200.0	168.0	145.6	16.0	1.6	8-ø18.4	100.0	M12
DN125	5"	125.0	300.0	700.0	208.0	250.0	210.0	182.0	20.0	2.0	8-ø23.0	125.0	M12
DN150	6"	150.0	340.0	750.0	227.0	280.0	240.0	212.0	22.0	2.0	8-ø23.0	125.0	M12
DN200	8"	200.0	450.0	1000.0	286.5	330.0	290.0	262.0	22.0	2.0	12-ø23.0	130.0	M12