Two Piece Flanged Ball Valves, Full Bore, ANSI 300
Duplex Alloy Material

MODENTIC

Fig No: MD-52-300 Full Bore
1/2"~ 10" DN15 ~ DN250

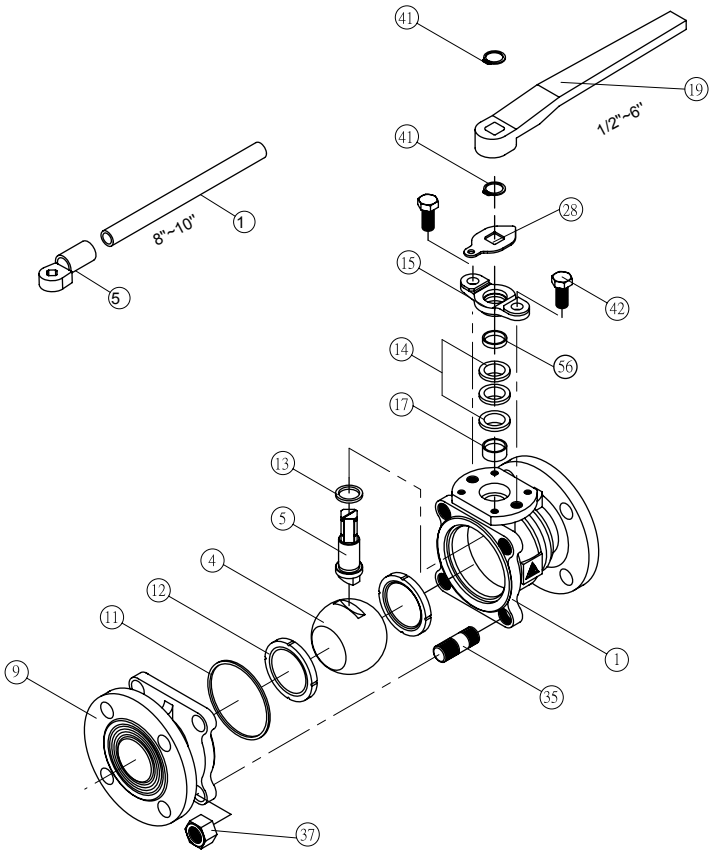

APPLICABLE STANDARDS	
Body Wall Thickness	ASME B16.34
Flange Dimensions	ASME B16.5
Face to Face	ASME B16.10
Material	ASTM
Pressure-Temperature Rating	ASME B16.34
Pressure Testing	API 598

MATERIALS LIST

NO.	PART NAME	MATERIAL
1	BODY	ASTM A890 Gr. 5A CE3MN (1.4469 GXCrNiMoN2674) ASTM A890 Gr. 4A CD3MN (1.4462 X2CrNiMoN2253)
4	BALL	ASTM A890 Gr. 5A CE3MN (1.4469 GXCrNiMoN2674) ASTM A890 Gr. 4A CD3MN (1.4462 X2CrNiMoN2253)
9	END CAP	ASTM A890 Gr. 5A CE3MN (1.4469 GXCrNiMoN2674) ASTM A890 Gr. 4A CD3MN (1.4462 X2CrNiMoN2253)
11	BODY SEAL	PTFE.
5	STEM	ASTM A890 Gr. 5A CE3MN (1.4469 GXCrNiMoN2674) ASTM A890 Gr. 4A CD3MN (1.4462 X2CrNiMoN2253)
14	STEM PACKING	PTFE.
19	HANDLE	ASTM A536 Gr. 65-45-12 (FCD45)
12	SEAT	PTFE. RTFE.(PTFE.+15%GF) PEEK. Delrin 50% S.S. + 50% PTFE.
13	THRUST WASHER	PTFE. PEEK.
17	STEM BUSHING	PTFE.
15	GLAND	ASTM A351 Gr. CF8
56	GLAND WASHER	PTFE.
28	STOP PLATE	SS304
37	NUT	ASTM A194 Gr.8
35	STUD	ASTM A193 Gr.B8
42	BOLT	SS304
41	SNAP RING	SS304

*Further information for fire safe type, please kindly contact us.

Fig No: MD-52-300 Full Bore

1/2"~ 10" DN15 ~ DN250

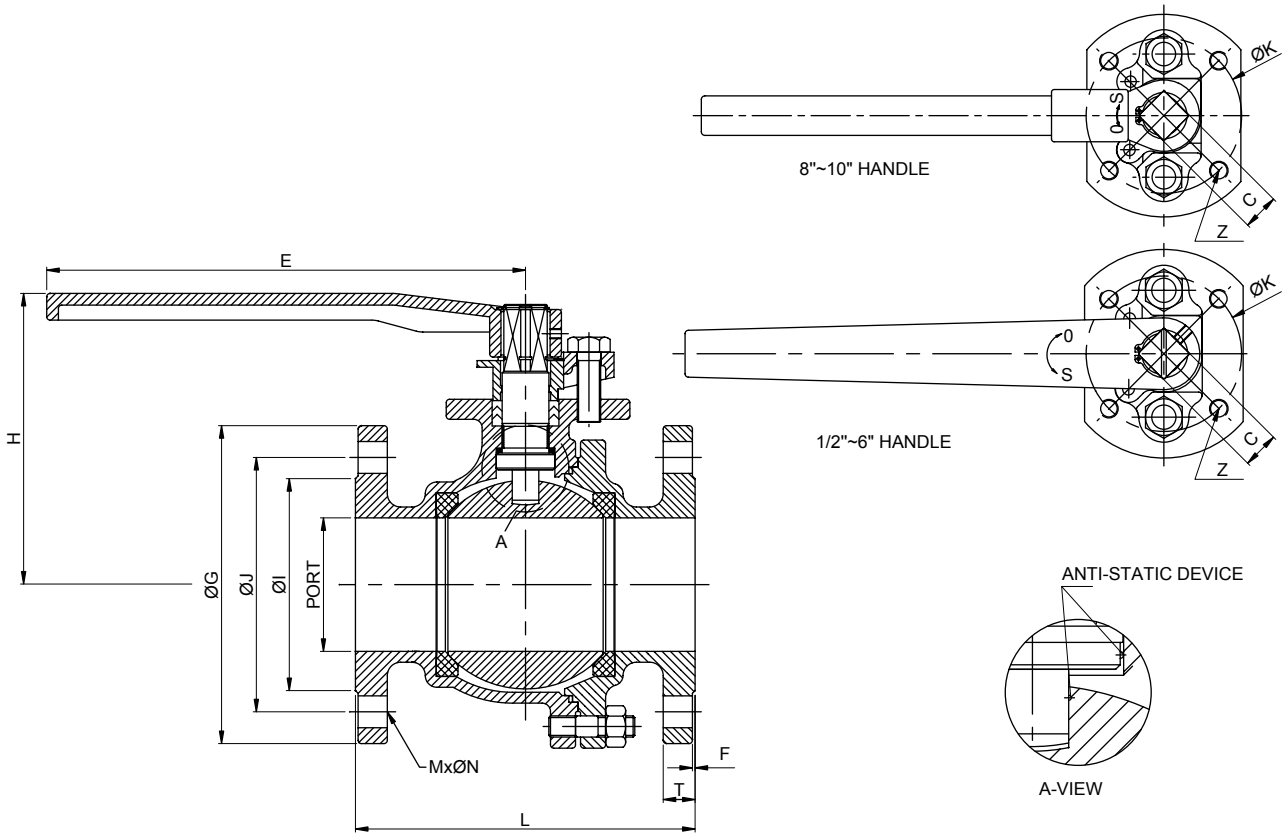

DIMENSIONS

unit: mm

SIZE	PORT	L	E	H	C	ØG	ØJ	ØI	T	F	M-ØN	ØK	Z
1/2"	15.0	139.7	130.0	73.0	11.0	95.3	66.5	35.1	14.3	1.6	4-Ø16.0	42.0 F04	1/4"-20
3/4"	20.0	152.4	130.0	76.0	11.0	117.3	82.6	42.9	15.8	1.6	4-Ø19.0	42.0 F04	1/4"-20
1"	25.0	165.1	160.0	86.0	14.0	124.0	88.9	50.8	17.6	1.6	4-Ø19.0	50.0 F05	1/4"-20
1-1/4"	32.0	177.8	160.0	91.0	14.0	133.4	98.6	63.5	19.1	1.6	4-Ø19.0	50.0 F05	1/4"-20
1-1/2"	40.0	190.5	200.0	119.0	17.0	155.4	114.3	73.2	20.6	1.6	8-Ø22.0	70.0 F07	5/16"-8
2"	50.0	215.9	200.0	127.0	17.0	165.1	127.0	91.9	22.4	1.6	8-Ø19.0	70.0 F07	5/16"-8
2-1/2"	65.0	241.3	200.0	136.0	17.0	190.5	149.4	104.6	25.4	1.6	8-Ø22.0	102.0 F10	5/16"-8
3"	80.0	282.4	325.0	164.0	22.0	209.6	168.2	127.0	28.5	1.6	8-Ø22.0	102.0 F10	3/8"-16
4"	100.0	304.8	325.0	178.0	22.0	254.0	200.2	157.2	31.8	1.6	8-Ø22.0	102.0 F10	3/8"-16
6"	150.0	403.2	760.0	259.0	27.0	317.5	269.7	215.9	36.6	1.6	12-Ø22.0	125.0 F12	1/2"-13
8"	200.0	419.0	1000.0	300.0	38.0	381.0	330.2	269.7	41.2	1.6	12-Ø25.0	140.0 F14	5/8"-11
10"	250.0	457.0	1000.0	350.0	46.0	444.5	387.4	324.0	47.8	1.6	12-Ø28.0	165.0 F16	3/4"-10