MODENTIC

Two Piece Flanged Fire Safe Approved Ball Valve, Full Bore, Class 150

Fig No. MD-82 Full Bore

1/2" - 12" DN 15 ~ DN 300

Features :

API 607 6th / ISO 10497-5 / BS 6755 Part II Fire Safe Approved
Investment casting component for 1/2" ~ 4"
Sand casting for 6" & above
Blow out proof design, Anti-static device
ISO 5211 Mounting flange
For General chemical and industrial application
Carbon Steel or Super Alloy available upon request

Standard Compliance :

Basic Design: ANSI B16.34 / API 608
Body wall thickness : B16.34
Face to face length : ANSI B16.10 Class 150
Flange dimension : ANSI B 16.5 Class 150
Body Material : ASTM A351
Pressure testing : API 598/ EN 12266

Specification :

End connection : Flanged RF end
Working pressure : 275 psi (CWP)
Temperature : -20 ~ 180°C

MATERIALS LIST

NO.	PART NAME	MATERIAL
1	BODY	ASTM A351 Gr.CF8M
4	BALL	ASTM A351 Gr.CF8M
5	STEM	SS316
9	END CAP	ASTM A351 Gr.CF8M
11	BODY SEAL	SS316+GRAPHITE
12	SEAT	RTFE.
13	THRUST WASHER	RTFE.
13-1	THRUST WASHER	PTFE.+50%SS316
14	STEM PACKING	GRAPHITE
15	GLAND BUSH	SS304
19	HANDLE	SS304
21	HANDLE COVER	PLASTIC
22	STEM NUT	SS304
27	ANTI-STATIC DEVICE	SS304
28	LOCKING DEVICE	SS304
29	BELLEVILLE WASHER	SS301
30	TAB WASHER	SS304
32	PACKING FOLLOWER	PTFE.+50%SS316
33	STOP PIN	SS304
35	STUD	SS304
37	BOLT NUT	SS304

DIMENSIONS

unit:mm

SIZE		PORT	L	E	H	ØG	ØJ	ØI	T	F	M	ØN	ØK	Z
DN15	1/2"	15	108	165	66	89.0	60.5	35.0	11.2	1.6	4	16	42	M5
DN20	3/4"	20	117	165	74	98.0	70.0	43.0	12.7	1.6	4	16	42	M5
DN25	1"	25	127	200	87	108.0	79.5	51.0	14.3	1.6	4	16	50	M6
DN32	1-1/4"	32	140	200	92	117.5	88.9	63.5	15.9	1.6	4	16	50	M6
DN40	1-1/2"	38	165	250	105	127.0	98.5	73.0	17.5	1.6	4	16	70	M8
DN50	2"	50	178	265	115	152.0	120.5	92.0	19.1	1.6	4	19	70	M8

DIMENSIONS

unit:inch

SIZE		PORT	L	E	H	ØG	ØJ	ØI	T	F	M	ØN	ØK	Z
DN15	1/2"	0.59	4.25	6.50	2.60	3.50	2.38	1.38	0.44	0.06	4	0.63	1.65	M5
DN20	3/4"	0.79	4.61	6.50	2.91	3.86	2.76	1.69	0.50	0.06	4	0.63	1.65	M5
DN25	1"	0.98	5.00	7.87	3.43	4.25	3.13	2.01	0.56	0.06	4	0.63	1.97	M6
DN32	1-1/4"	1.26	5.51	7.87	3.62	4.63	3.50	2.50	0.63	0.06	4	0.63	1.97	M6
DN40	1-1/2"	1.50	6.50	9.84	4.13	5.00	3.89	2.87	0.69	0.06	4	0.63	2.76	M8
DN50	2"	1.97	7.01	10.43	4.53	5.98	4.74	3.62	0.75	0.06	4	0.75	2.76	M8

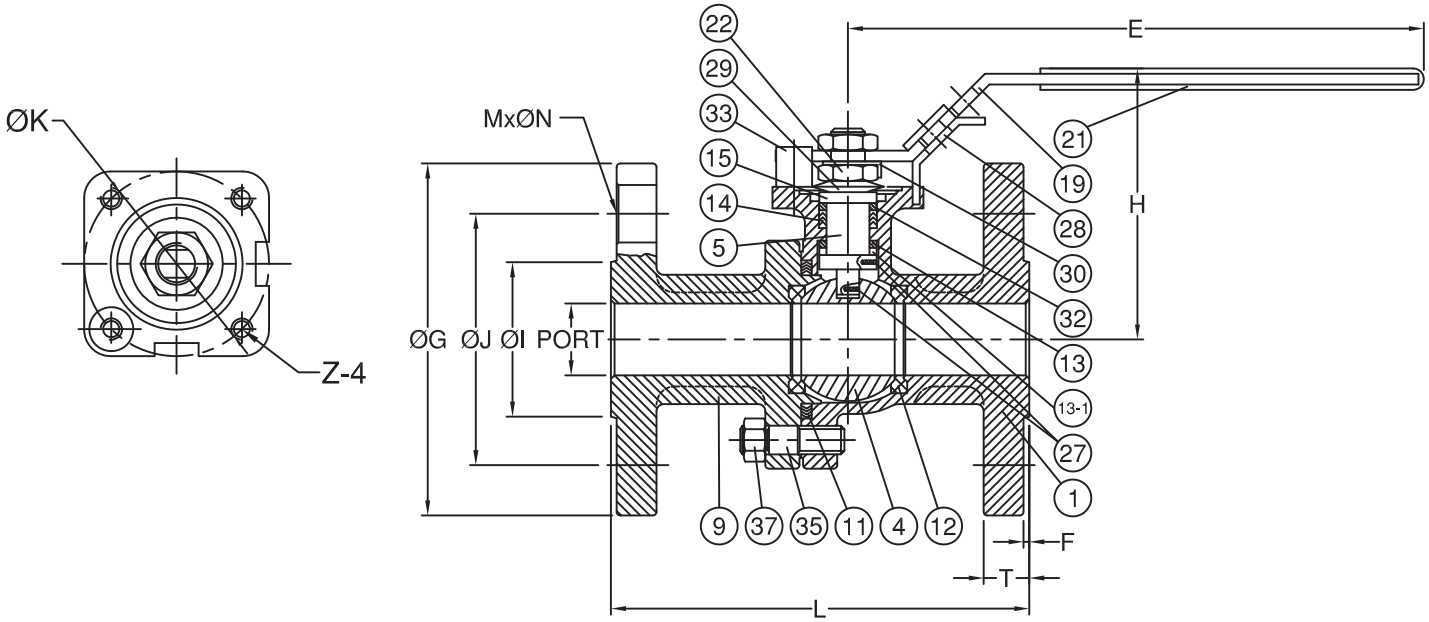

http://www.modentic.com.tw/

Two Piece Flanged Fire Safe Approved Ball Valve, Full Bore, Class 150

MODENTIC

Fig No. MD-82 Full Bore

1/2" - 12" DN 15 ~ DN 300

Features :

API 607 6th / ISO 10497-5 / BS 6755 Part II Fire Safe Approved
Investment casting component for 1/2" ~ 4"
Sand casting for 6" & above
Blow out proof design, Anti-static device
ISO 5211 Mounting flange
For General chemical and industrial application
Carbon Steel or Super Alloy available upon request

Standard Compliance :

Basic Design: ANSI B16.34 / API 608
Body wall thickness : B16.34
Face to face length : ANSI B16.10 Class 150
Flange dimension : ANSI B 16.5 Class 150
Body Material : ASTM A351
Pressure testing : API 598/ EN 12266

Specification :

End connection : Flanged RF end
Working pressure : 275 psi (CWP)
Temperature : -20 ~ 180°C

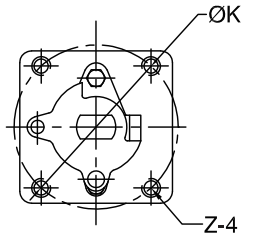

HANDLE VIEW
FOR 2-1/2"~4

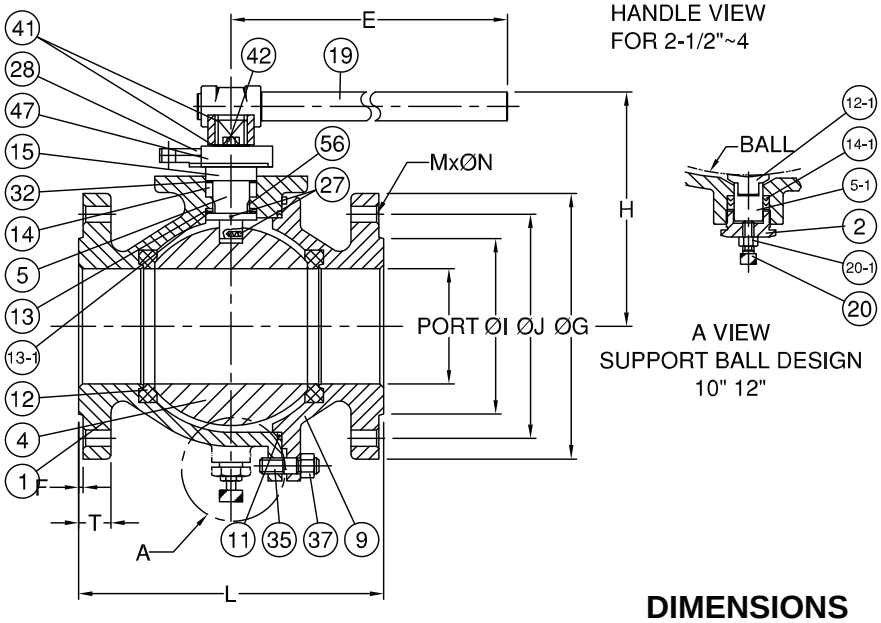

MATERIALS LIST

NO.	PART NAME	MATERIAL
1	BODY	ASTM A351 Gr.CF8M
2	SUPPORT NUT	SS304
4	BALL	ASTM A351 Gr.CF8M
5	STEM	SS316
5-1	SUPPORT PIN	SS316
9	END CAP	ASTM A351 Gr.CF8M
11	BODY SEAL	SS316+GRAPHITE
12	SEAT	RTFE.
12-1	PIN SEAT	RTFE.
13	THRUST WASHER	RTFE.
13-1	THRUST WASHER	PTFE.+50%SS316
14	STEM PACKING	GRAPHITE
14-1	PIN PACKING	GRAPHITE
15	GLAND BUSH	SS304
19	HANDLE	JUCTION HEAD(FCD) PIPE GRIP (S15C)
20	SET SCREW	SS304
20-1	SET NUT	SS304
27	ANTI-STATIC DEVICE	SS316
28	STOP PLATE	SS304
32	PACKING FOLLOWER	PTFE.+50%SS316
35	STUD	ASTM A193 Gr.B8
37	BOLT NUT	ASTM A194 Gr.8
41	SNAP RING	CARBON STEEL
42	GLAND BOLT	SS304
47	GLAND FLANGE	ASTM A351 Gr.CF8
56	BEARING	RTFE.

DIMENSIONS

unit:mm

SIZE		PORT	L	E	H	ØG	ØJ	ØI	T	F	M	ØN	ØK	Z
DN65	2-1/2"	65.0	190	390	165	178	139.5	105	22.3	1.6	4	19	102	M10
DN80	3"	76.0	203	390	166	190	152.5	127	23.9	1.6	4	19	102	M10
DN100	4"	101.5	229	390	183	229	190.5	157	23.9	1.6	8	19	102	M10
DN150	6"	152.0	394	650	285	279	241.5	216	25.4	1.6	8	22	125	M12
DN200	8"	200.0	457	950	294	343	298.5	270	28.6	1.6	8	22	125	M12
DN250	10"	250.0	533	1100	372	406	362.0	324	30.2	1.6	12	25	140	M16
DN300	12"	300.0	610	1100	413	483	432.0	381	31.8	1.6	12	25	140	M16

DIMENSIONS

unit:inch

SIZE		PORT	L	E	H	ØG	ØJ	ØI	T	F	M	ØN	ØK	Z
DN65	2-1/2"	2.56	7.48	15.35	6.50	7.01	5.49	4.13	0.88	0.06	4	0.75	4.02	M10
DN80	3"	2.99	7.99	15.35	6.54	7.48	6.00	5.00	0.94	0.06	4	0.75	4.02	M10
DN100	4"	4.00	9.02	15.35	7.20	9.02	7.50	6.18	0.94	0.06	8	0.75	4.02	M10
DN150	6"	5.98	15.51	25.59	11.22	10.98	9.51	8.50	1.00	0.06	8	0.87	4.92	M12
DN200	8"	7.87	17.99	37.40	11.57	13.50	11.75	10.63	1.13	0.06	8	0.87	4.92	M12
DN250	10"	9.84	20.98	43.31	14.65	15.98	14.25	12.76	1.19	0.06	12	0.98	5.51	M16
DN300	12"	11.81	24.02	43.31	16.26	19.02	17.01	15.00	1.25	0.06	12	0.98	5.51	M16