Two Pieces Flanged Ball Valve, ISO 5211 Direct mounting,ANSI#150, V Port 30°

MODENTIC

Fig No. VF-28

1/2" ~ 6" DN15 ~ DN150

Features:

Investment Casting Componment
ISO 5211 Direct Mounting Type
Blow-out-proof stem, Anti-static design
For General Chemical and Industrial application
Carbon Steel or Special Alloy available upon request

Standard Compliance :

Body wall thickness : B16.34
Face to Face : B16.10 Class 150
Flange dimension : B16.5 Class 150
Body Material : ASTM A351
Pressure testing : EN 12266-1

Specifications :

End connection : Flange RF
Working pressure : 275 psi (CWP)
Temperature : -20 ~180 °C

Option :

Fire safe design

MATERIALS LIST

NO.	PART NAME	MATERIAL
1	BODY	ASTM A351 CF8M
4	BALL	ASTM A351 Gr.CF8M
5	STEM	SS316
9	END CAP	1.4408/EN1503-1
11	BODY SEAL	PTFE.
12	SEAT	50%SS+50%PTFE.
13	THRUST WASHER	PTFE.
14	STEM PACKING	PTFE.
15	GLAND	SS304
19	HANDLE	SS304
21	HANDLE COVER	PLASTIC
22	STEM NUT	SS304
23	HANDLE WASHER	SS304
24	HANDLE NUT	SS304
28	LOCKING PAD	SS304
29	BELLEVILLE WASHER	SS304
30	TAB WASHER	SS304
31	STEM O-RING	VITON
32	PACKING FOLLOWER	RTFE.
33	STOP PIN	SS304
35	BODY STUD	ASTM A193 Gr.B8
37	BOLT NUT	ASTM A194 Gr.8

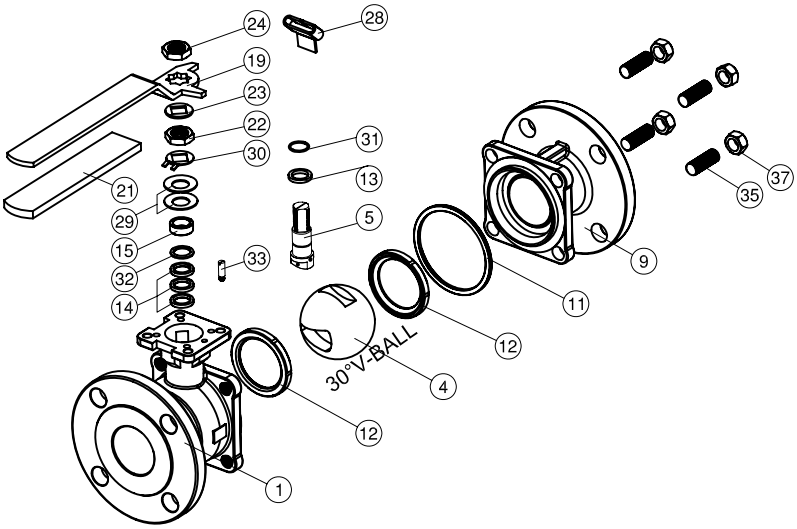

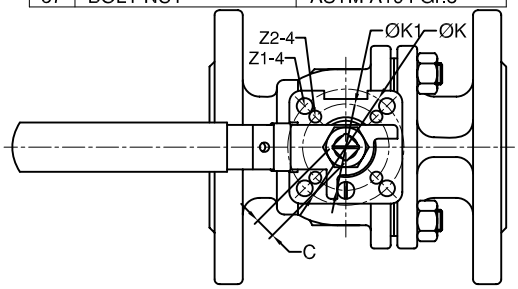

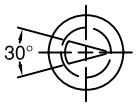

30° V-BALL

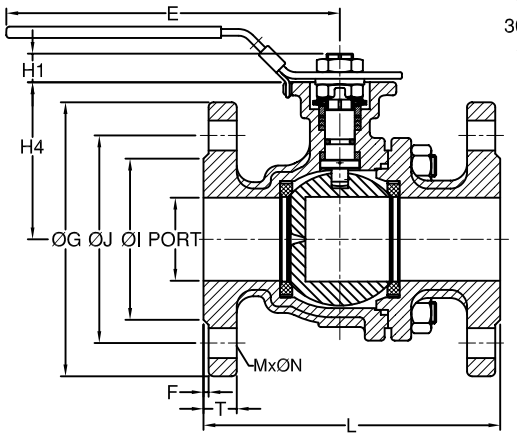

DIMENSIONS

unit:mm

SIZE	PORT	L	E	H1	H4	C	ØG	ØJ	ØI	T	F	M	ØN	ØK	ØK1	Z-4	Z1-4
DN15	1/2"	15.0	108.0	112.0	8.5	48.0	9.0	89.0	60.5	35.0	11.2	1.6	4	16.0	50.0	36.0	7.0	6.0
DN20	3/4"	20.0	117.0	112.0	8.5	62.0	9.0	98.6	70.0	43.0	12.7	1.6	4	16.0	50.0	36.0	7.0	6.0
DN25	1"	25.0	127.0	136.0	11.4	64.0	9.0	108.0	79.2	51.0	14.3	1.6	4	16.0	50.0	36.0	7.0	6.0
DN32	1-1/4"	32.0	140.0	185.0	11.4	71.0	9.0	117.5	88.9	63.5	15.9	1.6	4	16.0	50.0	36.0	7.0	6.0
DN40	1-1/2"	38.0	165.0	198.0	14.0	76.0	14.0	127.0	98.6	73.2	17.5	1.6	4	16.0	70.0	50.0	9.0	7.0
DN50	2"	50.0	178.0	198.0	13.7	84.5	14.0	152.5	120.7	92.0	19.1	1.6	4	19.0	70.0	50.0	9.0	7.0
DN65	2-1/2"	64.0	190.0	265.0	18.0	106.8	17.0	177.8	139.7	104.7	23.3	1.6	4	19.0	102.0	70.0	11.0	9.0
DN80	3"	76.0	203.0	265.0	18.0	116.0	17.0	190.5	152.4	127.0	23.9	1.6	4	19.0	102.0	70.0	11.0	9.0
DN100	4"	100.0	229.0	325.0	18.0	154.5	17.0	228.6	190.5	157.2	23.9	1.6	8	19.0	102.0	70.0	11.0	9.0

http://www.modentic.com.tw/

Two Pieces Flanged Ball Valve, ISO 5211 Direct mounting,ANSI#150, V Port 30°

MODENTIC

Fig No. VF-28

1/2" ~ 6" DN15 ~ DN150

Features:
Investment Casting Componment
ISO 5211Direct Mounting Type
Blow-out-proof stem, Anti-static design
For General Chemical and Industrial application
Carbon Steel or Special Alloy available upon request

Standard Compliance :
Body wall thickness : B16.34
Face to Face : B16.10 Class 150
Flange dimension : B16.5 Class 150
Body Material : ASTM A351
Pressure testing : EN 12266-1

Specifications :
End connection : Flange RF
Working pressure : 275 psi (CWP)
Temperature : -20 ~180 °C

Option :
Fire safe design

MATERIALS LIST

NO.	PART NAME	MATERIAL
1	BODY	ASTM A351 CF8M
4	BALL	ASTM A351 Gr.CF8M
5	STEM	SS316
9	END CAP	1.4408/EN1503-1
11	BODY SEAL	PTFE.
12	SEAT	50%SS+50%PTFE.
13	THRUST WASHER	PTFE.
14	STEM PACKING	PTFE.
15	GLAND	SS304
19	HANDLE	FCD45
20	SET SCREW	SS304
22	STEM NUT	SS304
23	HANDLE WASHER	SS304
24	HANDLE NUT	SS304
28	TRIANGLE STOPPER	SS304
29	BELLEVILLE WASHER	SS304
30	TAB WASHER	SS304
31	STEM O-RING	VITON
32	PACKING FOLLOWER	RTFE.
33	STOP PIN	SS304
35	BODY STUD	ASTM A193 Gr.B8
37	BOLT NUT	ASTM A194 Gr.8

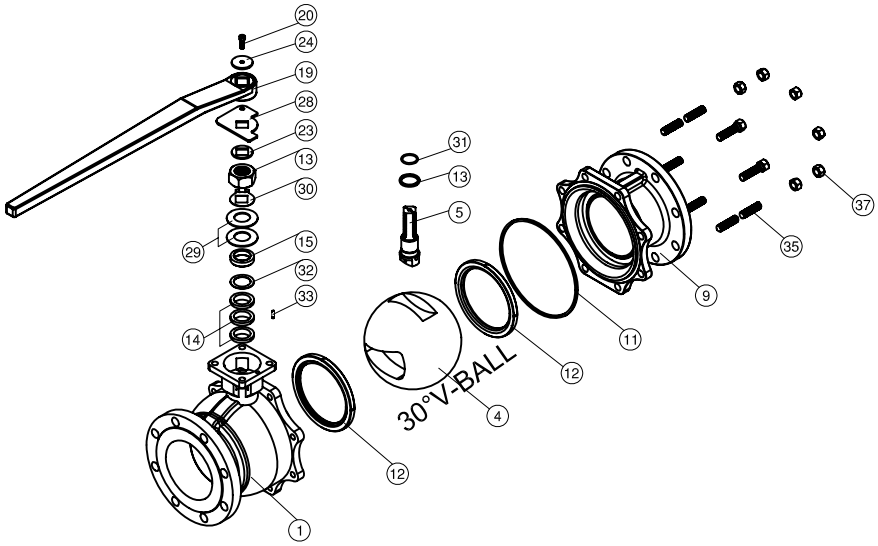

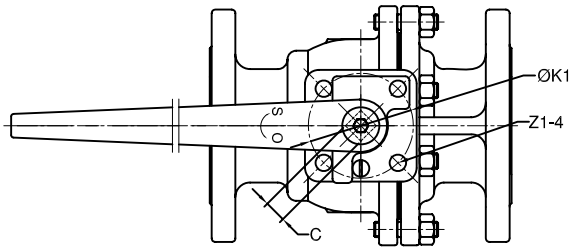

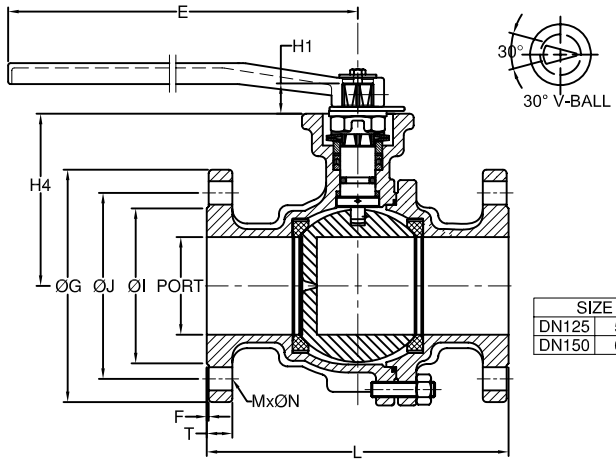

DIMENSIONS

unit:mm

SIZE		PORT	L	E	H1	H4	C	ØG	ØJ	ØI	T	F	M	ØN	ØK1	Z1-4
DN125	5"	125.0	325.0	750.0	30.0	194.0	27.0	254.0	216.0	186.0	24.0	1.6	8	22.3	125.0	14.0
DN150	6"	150.0	394.0	750.0	30.0	213.0	27.0	279.4	241.3	216.0	25.4	1.6	8	22.3	125.0	14.0

http://www.modentic.com.tw/