Two Piece Flanged Ball Valve, Direct Mounting PN16, V Port 60°

MODENTIC

Fig No. VF-28

1/2" ~ 6" DN15 ~ DN150

Feature :

Investment Casting Component
ISO 5211 Direct Mounting
Blow-out-proof stem, Anti-Static Design
For General Chemical and Industrial application
Carbon steel or Super Alloy upon request

Standard Compliance:

Body wall thickness : EN 12516-1/2
Face to Face : EN 3202 F4/F5
Flange dimension : DIN 2501 PN16
Body Material : EN 10213-4
Pressure testing : EN 12266-1

Specifications :

End connection : Flange RF
Working pressure : 14.6 Bar (CWP)
Temperature : -20 ~180°C

Option :

Fire safe design

MATERIALS LIST

NO.	PART NAME	MATERIAL
1	BODY	1.4408/EN1503-1
4	BALL	ASTM A351 Gr.CF8M
5	STEM	SS316
9	END CAP	1.4408/EN1503-1
11	BODY SEAL	PTFE.
12	SEAT	50%SS+50%PTFE.
13	THRUST WASHER	PTFE.
14	STEM PACKING	PTFE.
15	GLAND	SS304
19	HANDLE	SS304
21	HANDLE COVER	PLASTIC
22	STEM NUT	SS304
23	HANDLE WASHER	SS304
24	HANDLE NUT	SS304
28	LOCKING PAD	SS304
29	BELLEVILLE WASHER	SS304
30	TAB WASHER	SS304
31	STEM O-RING	VITON
32	PACKING FOLLOWER	RTFE.
33	STOP PIN	SS304
35	BODY STUD	ASTM A193 Gr.B8
37	BOLT NUT	ASTM A194 Gr.8

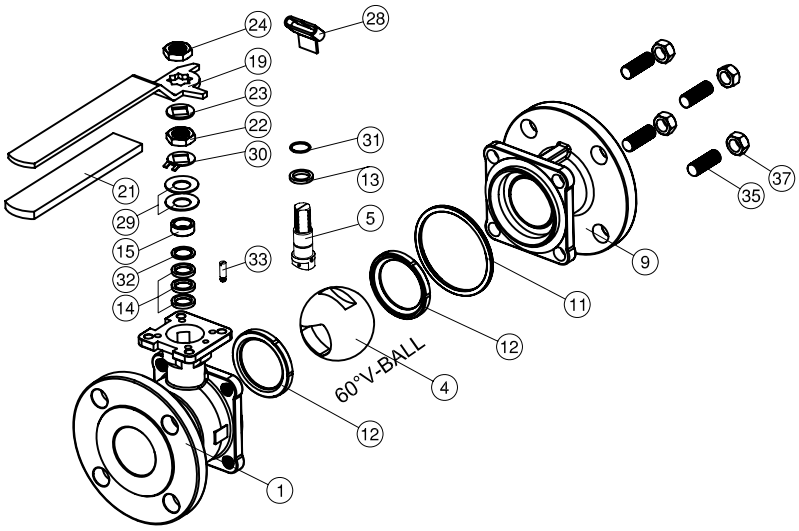

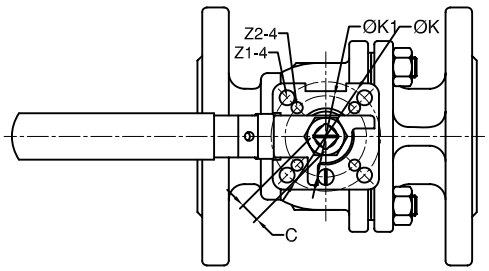

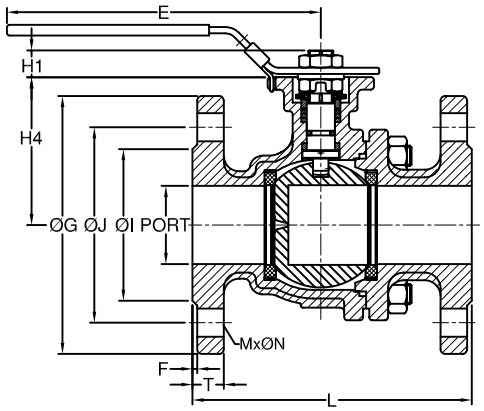

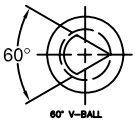

DIMENSIONS

unit:mm

SIZE		PORT	L	E	H1	H4	C	ØG	ØJ	ØI	T	F	M	ØN	ØK	ØK1	Z1	Z2
DN15	1/2"	15.0	115.0	112.0	8.5	48.0	9.0	95.0	65.0	45.0	16.0	2.0	4	14.0	50.0	36.0	7.0	6.0
DN20	3/4"	20.0	120.0	112.0	8.5	62.0	9.0	105.0	75.0	58.0	18.0	2.0	4	14.0	50.0	36.0	7.0	6.0
DN25	1"	25.0	125.0	136.0	11.4	64.0	9.0	115.0	85.0	68.0	18.0	2.0	4	14.0	50.0	36.0	7.0	6.0
DN32	1-1/4"	32.0	130.0	185.0	11.4	71.0	9.0	140.0	100.0	78.0	18.0	2.0	4	18.0	50.0	36.0	7.0	6.0
DN40	1-1/2"	38.0	140.0	198.0	14.0	76.0	14.0	150.0	110.0	88.0	18.0	2.0	4	18.0	70.0	50.0	9.0	7.0
DN50	2"	50.0	150.0	198.0	13.7	84.5	14.0	165.0	125.0	102.0	20.0	2.0	4	18.0	70.0	50.0	9.0	7.0
DN65	2-1/2"	63.0	170.0	265.0	18.0	106.8	17.0	185.0	145.0	122.0	18.0	2.0	4	18.0	102.0	70.0	11.0	9.0
DN80	3"	76.0	180.0	265.0	18.0	116.0	17.0	200.0	160.0	138.0	20.0	2.0	8	18.0	102.0	70.0	11.0	9.0
DN100	4"	100.0	190.0	325.0	18.0	154.5	17.0	220.0	180.0	158.0	20.0	2.0	8	18.0	102.0	70.0	11.0	9.0

http://www.modentic.com.tw/

Two Piece Flanged Ball Valve, Direct Mounting PN16, V Port 60°

MODENTIC

Fig No. VF-28

1/2" ~ 6" DN15 ~ DN150

Feature :

Investment Casting Component
ISO 5211 Direct Mounting
Blow-out-proof stem, Anti-Static Design
For General Chemical and Industrial application
Carbon steel or Super Alloy upon request

Standard Compliance:

Body wall thickness : EN 12516-1/2
Face to Face : EN 3202 F4/F5
Flange dimension : DIN 2501 PN16
Body Material : EN 10213-4
Pressure testing : EN 12266-1

Specifications :

End connection : Flange RF
Working pressure : 14.6 Bar (CWP)
Temperature : -20 ~180°C

Option :

Fire safe design

MATERIALS LIST

NO.	PART NAME	MATERIAL
1	BODY	1.4408/EN1503-1
4	BALL	ASTM A351 Gr.CF8M
5	STEM	SS316
9	END CAP	1.4408/EN1503-1
11	BODY SEAL	PTFE.
12	SEAT	50%SS+50%PTFE.
13	THRUST WASHER	PTFE.
14	STEM PACKING	PTFE.
15	GLAND	SS304
19	HANDLE	FCD45
20	SET SCREW	SS304
22	STEM NUT	SS304
23	HANDLE WASHER	SS304
24	HANDLE NUT	SS304
28	TRIANGLE STOPPER	SS304
29	BELLEVILLE WASHER	SS304
30	TAB WASHER	SS304
31	STEM O-RING	VITON
32	PACKING FOLLOWER	RTFE.
33	STOP PIN	SS304
35	BODY STUD	ASTM A193 Gr.B8
37	BOLT NUT	ASTM A194 Gr.8

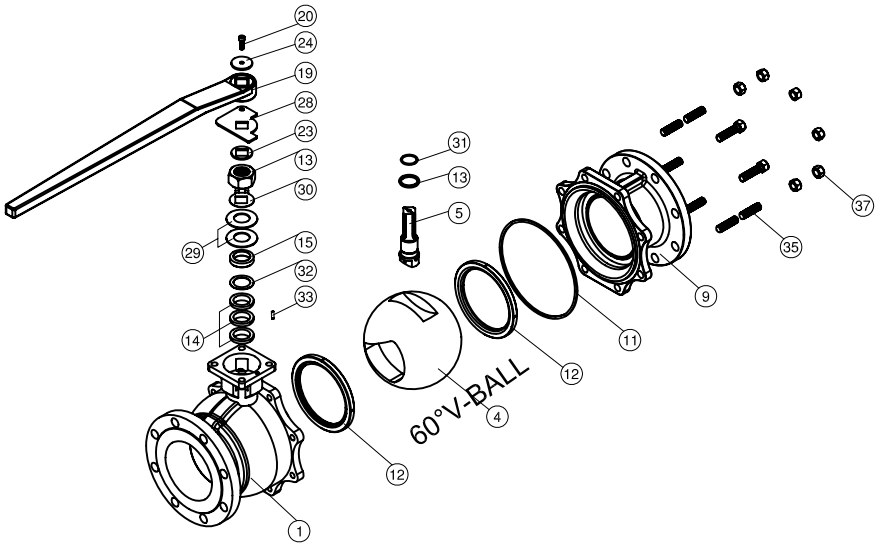

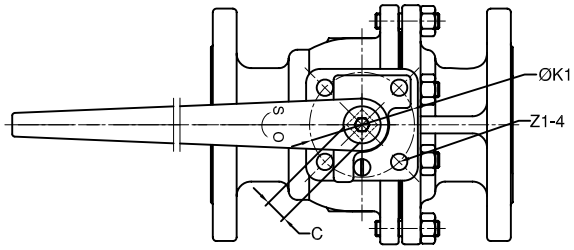

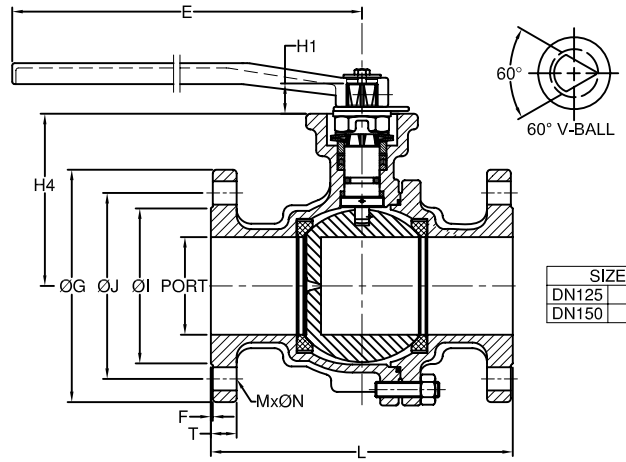

DIMENSIONS

unit:mm

SIZE		PORT	L	E	H1	H4	C	ØG	ØJ	ØI	T	F	M	ØN	ØK1	Z1-4
DN125	5"	125.0	325.0	750.0	30.0	194.0	27.0	250.0	210.0	188.0	22.0	2.0	8	18.0	125.0	14.0
DN150	6"	150.0	350.0	750.0	30.0	213.0	27.0	285.0	240.0	212.0	22.0	2.0	8	22.0	125.0	14.0

http://www.modentic.com.tw/